Starlet
ECLIPSE

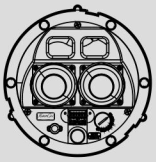

KamoGa
Karaoke | Movie | Gaming

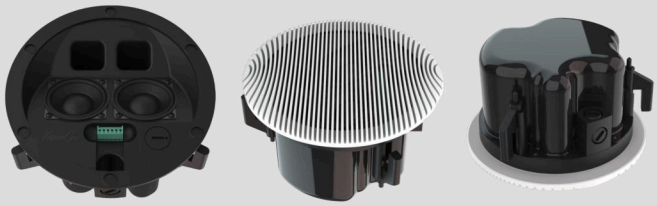

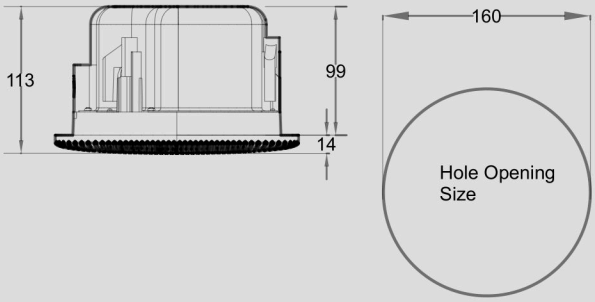

Model: Starlet Eclipse

- Frequency Response (-3dB): 210Hz - 20kHz
- Frequency Range (-10dB): 189Hz - 20kHz
- Sensitivity (SPL /1W /1m): 90dB ± 3dB
- Driver Unit: 2 x 2”
- Rated Power: 40W
- Peak Power: 60W
- Nominal Impedance: 8Ω (When transformer bypassed)

- Product Dimension: Ø 187mm x 113mm
- Cutout Size: Ø 160mm
- Net Weight: 980g / piece
- Installation Method: Ceiling mounting, Suspended
- Ceiling Thickness (For Installation): 13 - 38mm

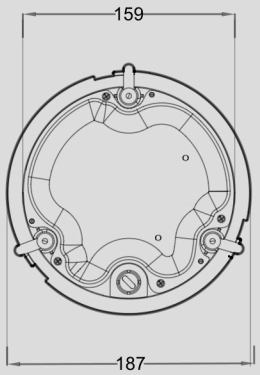

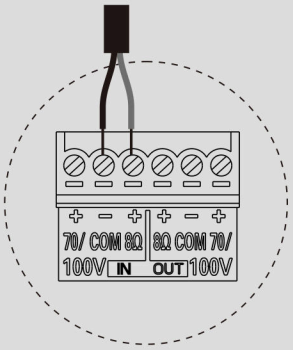

8Ω

Transformer Taps: 8Ω (Bypass)
70V Line: 10W, 20W, 40W
100V Line: 10W, 20W, 40W
(Daisy Chain Application)

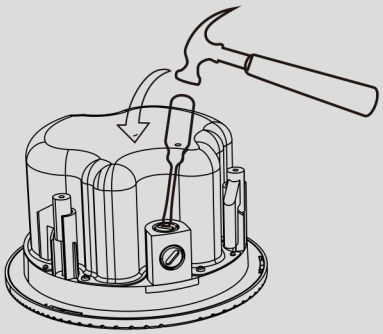

Specific Wire Entry Path

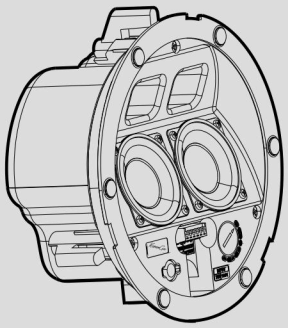

Tilted 2” x 2 Drivers
Position to hit sweet spot
Position to bounce off walls

Find out more setup information and detailed information at www.thunderstonektv.com

Compatible Systems (Optional)

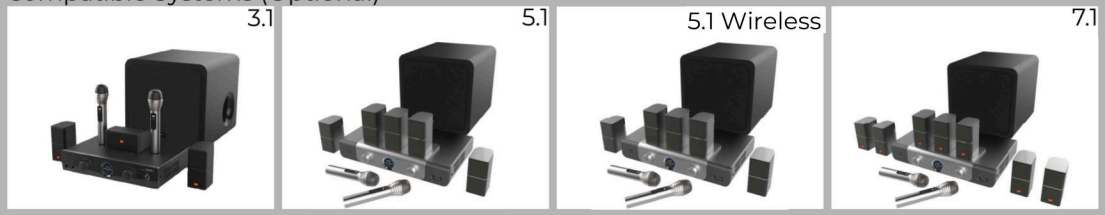

KMG 3.1 Basic Wiring and Installation $480
KMG 5.1 Basic Wiring and Installation $580
KMG 7.1 Basic Wiring and Installation $680

Thunderstone Technology (S) Pte Ltd
61 Ubi Road 1 #01-15/16 S(408727)
+65 8101 1688 | +65 6702 6577