Starlet

Satellite



KamoGa
Karaoke | **M**ovie | **G**aming







Model: Starlet Satellite

- Frequency Response (-3dB): 300Hz - 20kHz
- Sensitivity (SPL /1W /1m): 90dB ± 3dB
- Driver Unit: 2 x 2”
- Rated Power: 40W
- Peak Power: 60W
- Nominal Impedance: 8Ω
- THD: ≤ 5% (1kHz, 1W)

- Product Dimension: 123 x 61 x 83mm (H x W x D)
- Colours: White, Silver, Black

- Net Weight: 0.5kg / piece
- Installation Method: Wall, Ceiling, Shelf or Stand

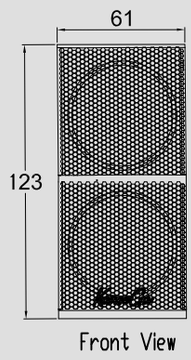

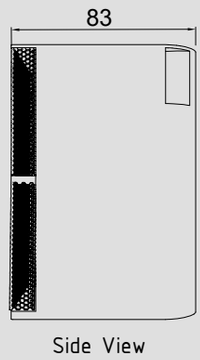

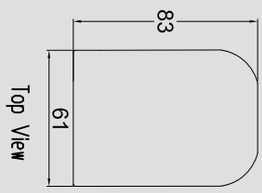

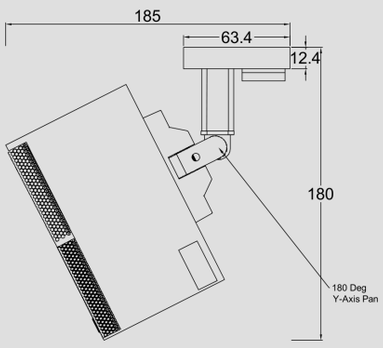

KMG-B2 Swivel Bracket
Extended Pole
Wall or Ceiling mount
180° Y-Axis Pan

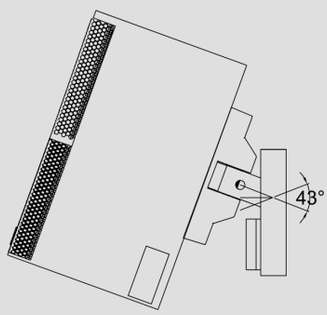

Short pole Wall Installation
Pan up to 43°

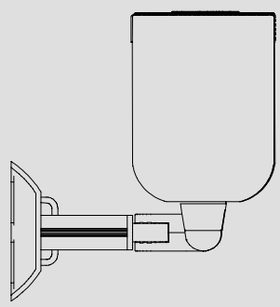

Extended Pole
180° X-Axis Pan

Find out more setup information and detailed information at www.thunderstonektv.com

Compatible Systems (Optional)









KMG 3.1 Basic Wiring and Installation $480
KMG 5.1 Basic Wiring and Installation $580
KMG 7.1 Basic Wiring and Installation $680

Thunderstone Technology (S) Pte Ltd
61 Ubi Road 1 #01-15/16 S(408727)
+65 8101 1688 | +65 6702 6577

KamoGa-Starlet-Satellite-Product-Sheet-PRINT · A4 210 x 297 mm · 3 mm bleed