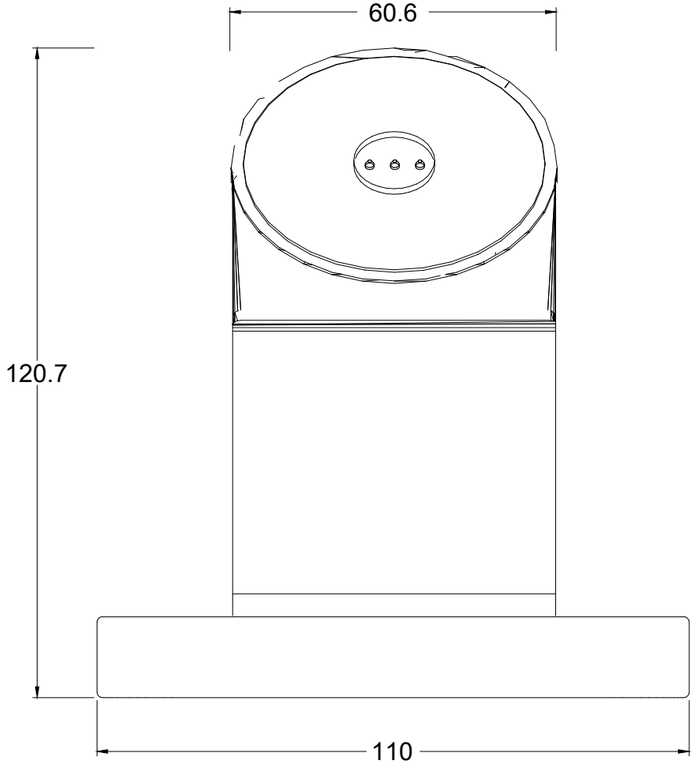


FRONT VIEW

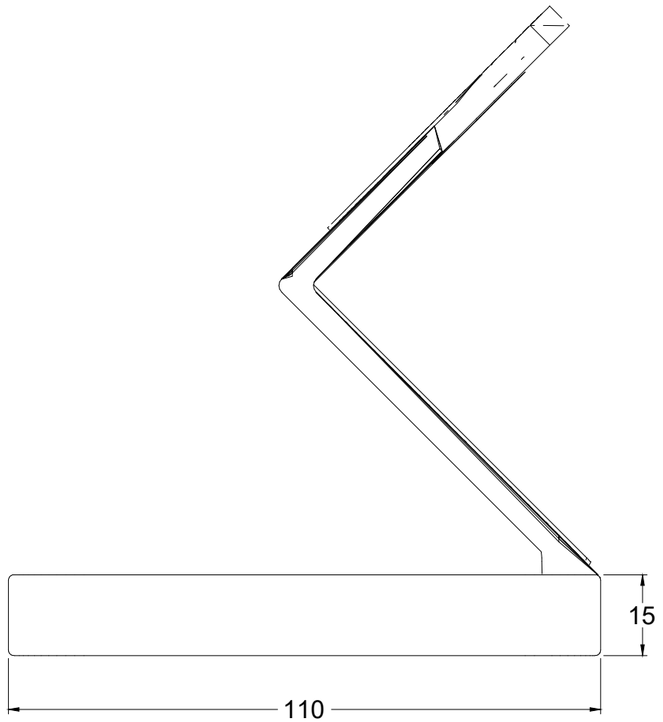


SIDE VIEW

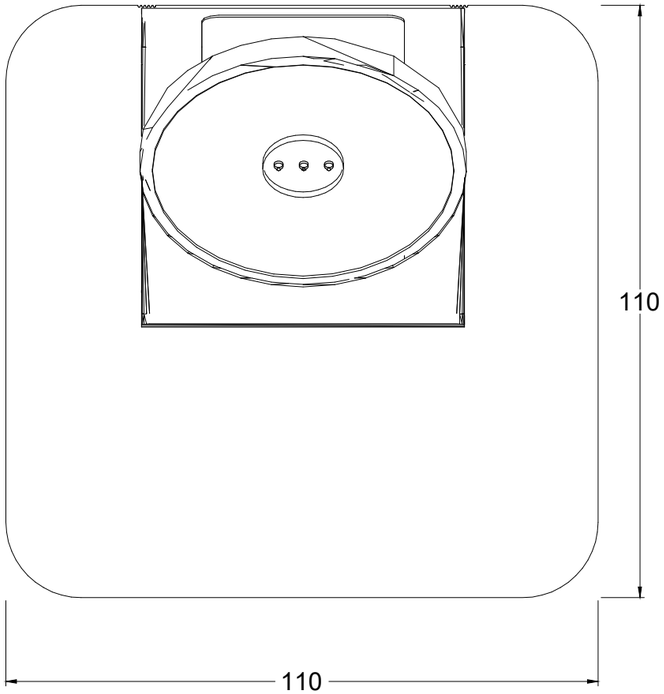


TOP VIEW

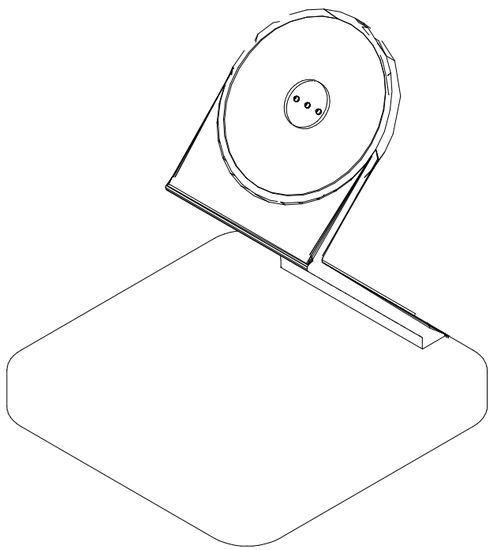

ISOMETRIC VIEW (REF)

NOTES:
1. BUILT-IN 10,000mAh POWER BANK, INPUT 5V-2A USB-C
2. CHARGES THE TABLET TO 100% FIRST, THEN RECHARGES ITS OWN POWER BANK
3. MAGNETIC CHARGING PAD HOLDS KBT-3 AT 45 DEG
4. ALL DIMENSIONS IN mm

| | | | |
|---|---|---|---|
| TS | THIRD ANGLE PROJECTION | DESCRIPTION: K Bubbles KBT-3 Table Dock with Power Bank | |
| | | CAGE CODE | DOCUMENT NUMBER: KB002-KBT-3-DOCK / VERSION: 1 |
| | UNLESS OTHERWISE SPECIFIED INTERPRET THIS DRAWING PER ASME Y14.5M-1994 | DO NOT SCALE DRAWING | NOTICE |

2026 THUNDERSTONE TECHNOLOGY (S) PTE LTD
THIS DRAWING MAY NOT BE COPIED, REPRODUCED, OR USED AS THE BASIS FOR MANUFACTURE OR SALE OF APPARATUS WITHOUT THE PRIOR WRITTEN AUTHORIZATION OF THUNDERSTONE TECHNOLOGY (S) PTE LTD